BRAINLAB

Technical Publication

DICOM Conformance Statement

DICOM Proxy 2.0

Document Revision 3

October 20, 2010

2010 © Copyright Brainlab AG

1 Conformance Statement Overview

This is a conformance statement for the Brainlab software DICOM Proxy. The DICOM Proxy represents an intermediate layer between a hospital PACS system and any other Brainlab applications, which require patient data. The DICOM Proxy acts as a Q/R server for Brainlab's medical applications and communicates only via the standardized DICOM interface.
The DICOM part of the application is

- Receive Queries via the DICOM Q/R protocol and answer them using the cache or forward them to one or more other DICOM Q/R servers.
- Receive Retrieve Request via the DICOM Q/R protocol and answer them using the cache or retrieve the data from one or more other DICOM Q/R servers.
- Receive pushed DICOM data and store it in the cache.

What is not part of DICOM Proxy:

- There is no way to import DICOM data from a file system or CD

This conformance statement only describes the Query/Retrieve SCU and Storage SCU/SCP part. The other services are internal by now and won't be documented here.

SOP Classes	User Of Service (SCU)	Provider Of Service (SCP)
Transfer		
Deformable Spatial Registration Storage	No	Yes
Encapsulated PDF Storage	No	Yes
Enhanced CT Image	No	Yes
Enhanced MR Image	No	Yes
Enhanced MR Color Image Storage	No	Yes
Enhanced PET Image Storage	No	Yes
Enhanced US Volume Storage	No	Yes
Enhanced XA Image Storage	No	Yes
Enhanced XRF Image Storage	No	Yes
Key Object Selection Document	No	Yes
MR Spectroscopy	No	Yes
Ophthalmic Tomography Image Storage	No	Yes
Procedure Log	No	Yes
Raw Data	No	Yes
SC Multi Frame Grayscale Byte	No	Yes
SC Multi Frame Grayscale Word	No	Yes
SC Multi Frame Single Bit	No	Yes
SC Multi Frame True Color	No	Yes
Segmentation Storage	No	Yes
Spatial Fiducials	No	Yes
Spatial Registration	No	Yes
Standard Basic Text SR	No	Yes
Standard Comprehensive SR	No	Yes
Standard CR	No	Yes
Standard CT	No	Yes
Standard Curve	No	Yes
Standard Digital X-Ray Image for Image for Presentation	No	Yes
Standard Digital X-Ray Image for Image for Processing	No	Yes
Standard Enhanced SR	No	Yes
Standard Grayscale Softcopy Image for Presentation State	No	Yes
Standard Hardcopy Color	No	Yes
Standard Hardcopy Grayscale	No	Yes
Standard Intra-oral X-Ray Image for Presentation	No	Yes
Standard Intra-oral X-Ray Image for Processing	No	Yes
Standard MG Image for Presentation	No	Yes
Standard MG Image for Processing	No	Yes
Standard Modality LUT	No	Yes
Standard MR	No	Yes
Standard NM	No	Yes
Standard NM Retired	No	Yes
Standard Ophthalmic 16 Bit	No	Yes
Standard Ophthalmic 8 Bit	No	Yes
Standard Overlay	No	Yes

SOP Classes	User Of Service (SCU)	Provider Of Service (SCP)
Standard PET	No	Yes
Standard PET Curve	No	Yes
Standard Print	No	Yes
Standard RT Beams Treat	No	Yes
Standard RT Brachy Treat	No	Yes
Standard RT Dose	No	Yes
Standard RT Image	No	Yes
Standard RT Plan	No	Yes
Standard RT Structure Set	No	Yes
Standard RT Treat Sum	No	Yes
Standard Secondary Capture	No	Yes
Standard US	No	Yes
Standard US Multi Frame	No	Yes
Standard US Multi Frame Retired	No	Yes
Standard US Retired	No	Yes
Standard Video Endoscopic	No	Yes
Standard Video Microscopic	No	Yes
Standard Video Photographic	No	Yes
Standard VL Endoscopic	No	Yes
Standard VL Microscopic	No	Yes
Standard VL Photographic	No	Yes
Standard VL Slide Microscopic	No	Yes
Standard VOI LUT	No	Yes
Standard X-Ray Angio	No	Yes
Standard X-Ray Angio Biplane	No	Yes
Standard X-Ray RF	No	Yes
Stereometic Relationship	No	Yes
Surface Segmentation Storage	No	Yes
X-Ray 3D Angiographic Image Storage	No	Yes
X-Ray 3D Craniofacial Image Storage	No	Yes
Query/Retrieve		
Patient Root Query/Retrieve Information Model - FIND	Yes	No
Patient Root Query/Retrieve Information Model - MOVE	Yes	No
Study Root Query/Retrieve Information Model - FIND	Yes	No
Study Root Query/Retrieve Information Model - MOVE	Yes	No

Table 1-1: Network services supported by DICOM Proxy

2 Table of Contents

1 Conformance Statement Overview 3

2 Table of Contents 7

3 Introduction 9

3.1 Revision History 9
3.2 Audience 9
3.3 Remarks 9
3.4 Abbreviations 10
3.5 References 10

4 Networking 11

4.1 Implementation Model 11
4.1.1 Application Data Flow Diagram 11
4.1.2 Functional Definition of Application Entity (AE) 12
4.1.3 Sequencing Of Real World Activities 12
4.2 Application Entity Specifications 13
4.2.1 DICOM Proxy Specification 13
4.2.1.1 SOP Classes and Transfer Syntaxes 13
4.2.1.2 Association Policies 17
4.2.1.2.1 General 17
4.2.1.2.2 Number of Associations 17
4.2.1.2.3 Asynchronous Nature 17
4.2.1.2.4 Implementation Identifying Information 17
4.2.1.3 Association Initiation Policy 17
4.2.1.3.1 Activity – Find 17
4.2.1.3.2 Activity – Retrieve 19
4.2.1.4 Association Acceptance Policy 20
4.2.1.4.1 Activity - Store 20
4.3 Network Interfaces 21
4.3.1 Physical Network Interface 21
4.3.2 Additional Protocols 21
4.4 Configuration 21
4.4.1 AE Title / Presentation Address Mapping 21
4.4.1.1 Local AE Titles 21
4.4.1.2 Remote AE Title/Presentation Address Mapping 21
4.4.2 Parameters 21

5 Media Interchange 23

6 Support of Extended Character Sets 25

7 Security Profiles 27

8 Annexes 28

8.1 IOD Contents 28
8.1.1 Created SOP Instances 28
8.1.2 Usage of Attributes from Received IODs 28
8.2 Data Dictionary of Private Attributes 28
8.3 Coded Terminology and Templates 28
8.4 Grayscale Image Consistency 28
8.5 Standard Extended/Specialized/Private Sop Classes 28
8.6 Private Transfer Syntaxes 28

9 Indexes 29
9.1 Index of Tables 29
9.2 Index of Figures 29

3 Introduction

3.1 Revision History

Document Version	Date of Issue	Description
1	January 14, 2010	Initial release for DICOM Proxy 1.0
2	March 12, 2010	Update for DICOM Proxy 1.1
3	October 20, 2010	Update for DICOM Proxy 2.0

3.2 Audience

This document is intended for hospital staff, health system integrators, software designers or implementers. It is assumed that the reader has a working understanding of DICOM.

3.3 Remarks

DICOM, by itself, does not guarantee interoperability. However, the Conformance Statement facilitates a first-level validation for interoperability between different applications supporting the same DICOM functionality. The Conformance Statement should be read and understood in conjunction with the DICOM Standard [1]. However, by itself it is not guaranteed to ensure the desired interoperability and a successful interconnectivity.

The user should be aware of the following important issues:

- The comparison of different conformance statements is the first step towards assessing interconnectivity between Brainlab and non–Brainlab equipment.
- This Conformance Statement is not intended to replace validation with other DICOM equipment to ensure proper exchange of information intended. An acceptance protocol is available to validate the desired level of connectivity.
- The DICOM standard will evolve to meet the users' future requirements. Brainlab reserves the right to make changes to its products or to discontinue its delivery.

3.4 Abbreviations

There are a variety of terms and abbreviations used in the document that are defined in the DICOM Standard. Abbreviations and terms are as follows:

AE	DICOM Application Entity
AET	Application Entity Title
IOD	(DICOM) Information Object Definition
ISO	International Standard Organization
PDU	DICOM Protocol Data Unit
Q/R	Query and Retrieve
SCU	DICOM Service Class User (DICOM client)
SCP	DICOM Service Class Provider (DICOM server)
SOP	DICOM Service-Object Pair

3.5 References

[1] Digital Imaging and Communications in Medicine (DICOM) 3.0, NEMA PS 3.1-3.18 – 2006

4 Networking

4.1 Implementation Model

The Brainlab DICOM Proxy application is an implementation of:

- A Query/Retrieve SCU to query DICOM archives and to initiate a move request for the queried archive.
- A Query/Retrieve SCP to receive queries and move requests and answer them locally or forward them to another Q/R server (only used by Brainlab Applications).
- A Storage SCU which sends DICOM data to the requesting node (only used by Brainlab Applications).
- A Storage SCP to receive data.

4.1.1 Application Data Flow Diagram

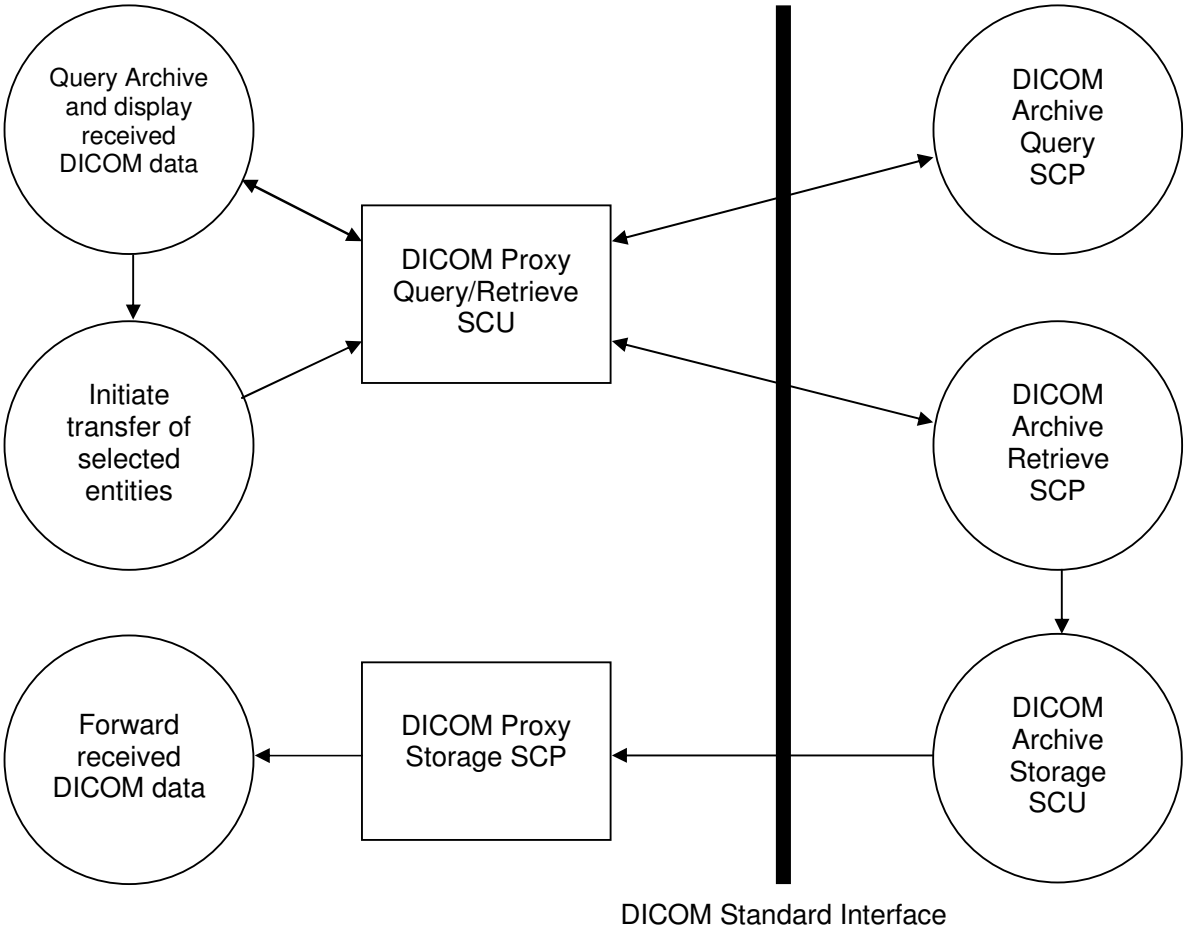

Figure 4-1: The Query/Retrieve SCU and Storage SCP application flow diagram

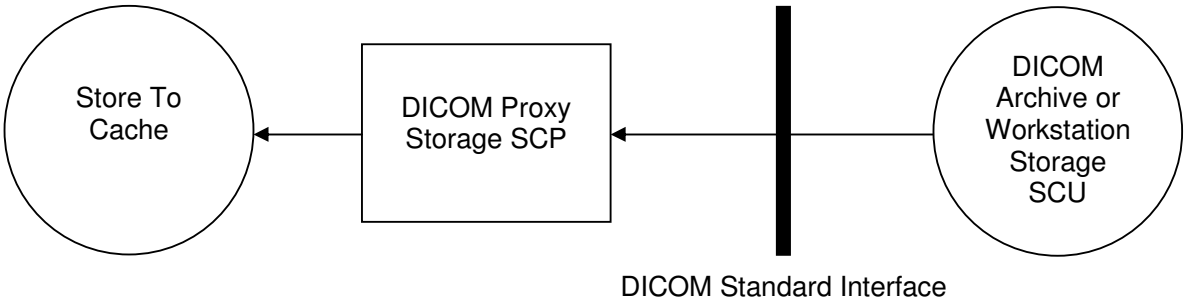

Figure 4-2: The Storage SCP application flow diagram

4.1.2 Functional Definition of Application Entity (AE)

Communications and data transfer with remote AEs are accomplished utilizing the DICOM protocol over a network using the TCP/IP protocol stack.

- Query and Retrieve SCU:
  The Q/R SCU receives find or move request from the Q/R SCP and sends it to an external Q/R server. The find request can be performed (depending on the negotiated models) on all DICOM levels (patient, study, series or instance). A move request can be performed on series and instance level.

- Storage SCP:
  During a move operation a DICOM Storage SCP is invoked. DICOM Proxy accepts an association with a Storage SCU negotiating any of the SOP Classes listed in Table 4-2. If the received data matches a running move request, the data is forwarded to the AET specified in the move request. To send the data, the Proxies Storage SCU is used. If it does not match or if no move request is running, the data is stored in the cache and can be retrieved later on.

4.1.3 Sequencing Of Real World Activities

DICOM Proxy Query/Retrieve SCU performs a sequencing of real world activities as follows:

1. Query Archive and forward the results to the requesting Brainlab application:
   a. Send DICOM Query/Retrieve C-FIND request.
   b. Receive DICOM Query/Retrieve C-FIND responses.
2. Brainlab Application requests data to load.
3. Initiate transfer of selected entities:
   a. Send a DICOM Query/Retrieve C-MOVE request
   b. Receive DICOM C-STORE requests with the requested SOP instances.
   c. Receive DICOM Query/Retrieve C-MOVE responses
4. Forward the data to the requesting application.

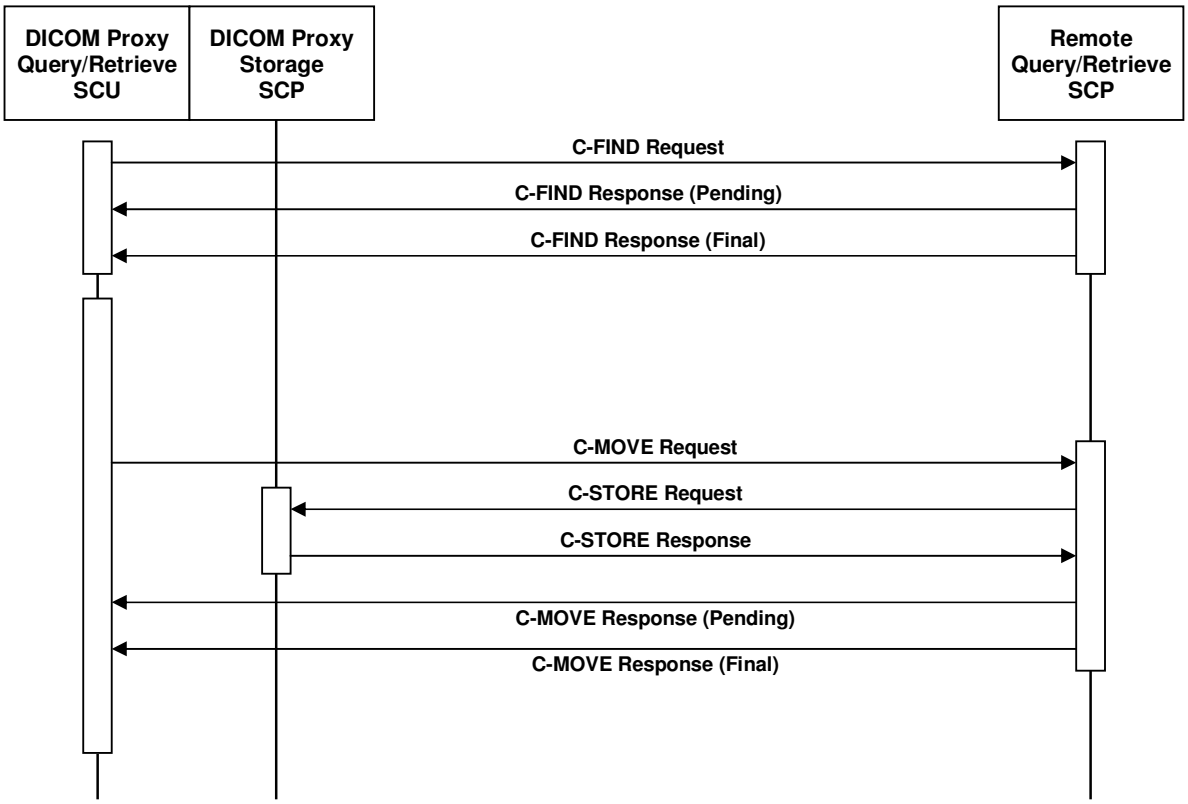

Figure 4-3: Sequencing of Query/Retrieve SCU and Storage SCP

4.2 Application Entity Specifications

4.2.1 DICOM Proxy Specification

4.2.1.1 SOP Classes and Transfer Syntaxes

DICOM Proxy receives a C-ECHO request in order to test the connection to a remote AE. It provides standard conformance to the following DICOM V3.0 SOP Classes:

SOP Class Name	SOP Class UID	SCU	SCP
Verification SOP Class	1.2.840.10008.1.1	Yes	Yes

Table 4-1: Supported Verification SOP Classes

DICOM Proxy imports and exports DICOM image data. It provides Standard Conformance to the following DICOM V3.0 SOP Classes. The "Transfer Syntax" column specifies the Transfer Syntax List used for the SOP Class. This various transfer syntax lists are specified in table 4-4.

SOP Class Name	SOP Class UID	SCU	SCP	Transfer Syntax
Deformable Spatial Registration Storage	1.2.840.10008.5.1.4.1.1.66.3	No	Yes	UNCOMP

SOP Class Name	SOP Class UID	SCU	SCP	Transfer Syntax
Encapsulated PDF Storage	1.2.840.10008.5.1.4.1.1.104.1	No	Yes	UNCOMP
Enhanced CT Image	1.2.840.10008.5.1.4.1.1.2.1	No	Yes	COMP
Enhanced MR Image	1.2.840.10008.5.1.4.1.1.4.1	No	Yes	COMP
Enhanced MR Color Image Storage	1.2.840.10008.5.1.4.1.1.4.	No	Yes	COMP
Enhanced PET Image Storage	1.2.840.10008.5.1.4.1.1.130	No	Yes	COMP
Enhanced US Volume Storage	1.2.840.10008.5.1.4.1.1.6.2	No	Yes	COMP
Enhanced XA Image Storage	1.2.840.10008.5.1.4.1.1.12.1.1	No	Yes	COMP
Enhanced XRF Image Storage	1.2.840.10008.5.1.4.1.1.12.2.1	No	Yes	COMP
Key Object Selection Document	1.2.840.10008.5.1.4.1.1.88.59	No	Yes	UNCOMP
MR Spectroscopy	1.2.840.10008.5.1.4.1.1.4.2	No	Yes	COMP
Ophthalmic Tomography Image Storage	1.2.840.10008.5.1.4.1.1.77.1.5.4	No	Yes	COMP
Procedure Log	1.2.840.10008.5.1.4.1.1.88.40	No	Yes	COMP
Raw Data	1.2.840.10008.5.1.4.1.1.66	No	Yes	UNCOMP
SC Multi Frame Grayscale Byte	1.2.840.10008.5.1.4.1.1.7.2	No	Yes	COMP
SC Multi Frame Grayscale Word	1.2.840.10008.5.1.4.1.1.7.3	No	Yes	COMP
SC Multi Frame Single Bit	1.2.840.10008.5.1.4.1.1.7.1	No	Yes	COMP
SC Multi Frame True Color	1.2.840.10008.5.1.4.1.1.7.4	No	Yes	COMP
Segmentation Storage	1.2.840.10008.5.1.4.1.1.66.4	No	Yes	RLE
Spatial Fiducials	1.2.840.10008.5.1.4.1.1.66.2	No	Yes	UNCOMP
Spatial Registration	1.2.840.10008.5.1.4.1.1.66.1	No	Yes	UNCOMP
Standard Basic Text SR	1.2.840.10008.5.1.4.1.1.88.11	No	Yes	UNCOMP
Standard Comprehensive SR	1.2.840.10008.5.1.4.1.1.88.33	No	Yes	UNCOMP
Standard CR	1.2.840.10008.5.1.4.1.1.1	No	Yes	COMP
Standard CT	1.2.840.10008.5.1.4.1.1.2	No	Yes	COMP
Standard Curve	1.2.840.10008.5.1.4.1.1.9	No	Yes	UNCOMP
Standard Digital X-Ray Image for Image for Presentation	1.2.840.10008.5.1.4.1.1.1.1	No	Yes	COMP
Standard Digital X-Ray Image for Image for Processing	1.2.840.10008.5.1.4.1.1.1.1.1	No	Yes	COMP
Standard Enhanced SR	1.2.840.10008.5.1.4.1.1.88.22	No	Yes	UNCOMP
Standard Grayscale Softcopy Image for Presentation State	1.2.840.10008.5.1.4.1.1.11.1	No	Yes	UNCOMP
Standard Hardcopy Color	1.2.840.10008.5.1.1.30	No	Yes	COMP
Standard Hardcopy Grayscale	1.2.840.10008.5.1.1.29	No	Yes	COMP
Standard Intra-oral X-Ray Image for Presentation	1.2.840.10008.5.1.4.1.1.1.3	No	Yes	UNCOMP
Standard Intra-oral X-Ray Image for Processing	1.2.840.10008.5.1.4.1.1.1.3.1	No	Yes	UNCOMP
Standard MG Image for Presentation	1.2.840.10008.5.1.4.1.1.1.2	No	Yes	COMP
Standard MG Image for Processing	1.2.840.10008.5.1.4.1.1.1.2.1	No	Yes	COMP
Standard Modality LUT	1.2.840.10008.5.1.4.1.1.10	No	Yes	UNCOMP

SOP Class Name	SOP Class UID	SCU	SCP	Transfer Syntax
Standard MR	1.2.840.10008.5.1.4.1.1.4	No	Yes	COMP
Standard NM	1.2.840.10008.5.1.4.1.1.20	No	Yes	COMP
Standard NM Retired	1.2.840.10008.5.1.4.1.1.5	No	Yes	COMP
Standard Ophthalmic 16 Bit	1.2.840.10008.5.1.4.1.1.77.1.5.2	No	Yes	COMP
Standard Ophthalmic 8 Bit	1.2.840.10008.5.1.4.1.1.77.1.5.1	No	Yes	COMP
Standard Overlay	1.2.840.10008.5.1.4.1.1.8	No	Yes	UNCOMP
Standard PET	1.2.840.10008.5.1.4.1.1.128	No	Yes	COMP
Standard PET Curve	1.2.840.10008.5.1.4.1.1.129	No	Yes	UNCOMP
Standard Print	1.2.840.10008.5.1.1.27	No	Yes	UNCOMP
Standard RT Beams Treat	1.2.840.10008.5.1.4.1.1.481.4	No	Yes	COMP
Standard RT Brachy Treat	1.2.840.10008.5.1.4.1.1.481.6	No	Yes	UNCOMP
Standard RT Dose	1.2.840.10008.5.1.4.1.1.481.2	No	Yes	IMPL
Standard RT Image	1.2.840.10008.5.1.4.1.1.481.1	No	Yes	COMP
Standard RT Plan	1.2.840.10008.5.1.4.1.1.481.5	No	Yes	IMPL
Standard RT Structure Set	1.2.840.10008.5.1.4.1.1.481.3	No	Yes	IMPL
Standard RT Treat Sum	1.2.840.10008.5.1.4.1.1.481.7	No	Yes	UNCOMP
Standard Secondary Capture	1.2.840.10008.5.1.4.1.1.7	No	Yes	COMP
Standard US	1.2.840.10008.5.1.4.1.1.6.1	No	Yes	COMP
Standard US Multi Frame	1.2.840.10008.5.1.4.1.1.3.1	No	Yes	COMP
Standard US Multi Frame Retired	1.2.840.10008.5.1.4.1.1.3	No	Yes	COMP
Standard US Retired	1.2.840.10008.5.1.4.1.1.6	No	Yes	UNCOMP
Standard Video Endoscopic	1.2.840.10008.5.1.4.1.1.77.1.1.1	No	Yes	COMP
Standard Video Microscopic	1.2.840.10008.5.1.4.1.1.77.1.2.1	No	Yes	COMP
Standard Video Photographic	1.2.840.10008.5.1.4.1.1.77.1.4.1	No	Yes	COMP
Standard VL Endoscopic	1.2.840.10008.5.1.4.1.1.77.1.1	No	Yes	COMP
Standard VL Microscopic	1.2.840.10008.5.1.4.1.1.77.1.2	No	Yes	COMP
Standard VL Photographic	1.2.840.10008.5.1.4.1.1.77.1.4	No	Yes	COMP
Standard VL Slide Microscopic	1.2.840.10008.5.1.4.1.1.77.1.3	No	Yes	COMP
Standard VOI LUT	1.2.840.10008.5.1.4.1.1.11	No	Yes	UNCOMP
Standard X-Ray Angio	1.2.840.10008.5.1.4.1.1.12.1	No	Yes	COMP
Standard X-Ray Angio Biplane	1.2.840.10008.5.1.4.1.1.12.3	No	Yes	COMP
Standard X-Ray RF	1.2.840.10008.5.1.4.1.1.12.2	No	Yes	COMP
Stereometic Relationship	1.2.840.10008.5.1.4.1.1.77.1.5.3	No	Yes	UNCOMP
Surface Segmentation Storage	1.2.840.10008.5.1.4.1.1.66.5	No	Yes	UNCOMP
X-Ray 3D Angiographic Image Storage	1.2.840.10008.5.1.4.1.1.13.1.1	No	Yes	COMP
X-Ray 3D Craniofacial Image Storage	1.2.840.10008.5.1.4.1.1.13.1.2	No	Yes	COMP

Table 4-2: Supported Storage SOP Classes

DICOM Proxy is able to query a remote archive and act itself as an image archive. It provides Standard Conformance to the following DICOM V3.0 SOP Classes (the uncompressed transfer Syntax list is used):

SOP Class Name	SOP Class UID	SCU	SCP
Patient Root Query/Retrieve Information Model - FIND	1.2.840.10008.5.1.4.1.2.1.1	Yes	No
Patient Root Query/Retrieve Information Model - MOVE	1.2.840.10008.5.1.4.1.2.1.2	Yes	No
Study Root Query/Retrieve Information Model - FIND	1.2.840.10008.5.1.4.1.2.2.1	Yes	No
Study Root Query/Retrieve Information Model - MOVE	1.2.840.10008.5.1.4.1.2.2.2	Yes	No

Table 4-3: Supported Query/Retrieve SOP Classes

DICOM Proxy supports the following transfer syntax lists. In an association negotiation the syntaxes are proposed in the order of appearance in the list.

Transfer Syntax Name	Transfer Syntax UID	SCU	SCP	Extended Negotiation
Uncompressed Transfer Syntax List (UNCOMP)				
DICOM Explicit VR Little Endian	1.2.840.10008.1.2.1	Yes	Yes	None
DICOM Explicit VR Big Endian	1.2.840.10008.1.2.2	Yes	Yes	None
DICOM Implicit VR Little Endian	1.2.840.10008.1.2	Yes	Yes	None
Compressed Transfer Syntax List (COMP)				
DICOM Explicit VR Little Endian	1.2.840.10008.1.2.1	Yes	Yes	None
DICOM Explicit VR Big Endian	1.2.840.10008.1.2.2	Yes	Yes	None
DICOM Implicit VR Little Endian	1.2.840.10008.1.2	Yes	Yes	None
JPEG Lossless, Non-Hierarchical, First-Order Prediction (Process 14)	1.2.840.10008.1.2.4.70	No	Yes	None
RLE Lossless	1.2.840.10008.1.2.5	No	Yes	None
RLE Transfer Syntax List (RLE)				
RLE Lossless	1.2.840.10008.1.2.5	No	Yes	None
DICOM Explicit VR Little Endian	1.2.840.10008.1.2.1	Yes	Yes	None
DICOM Explicit VR Big Endian	1.2.840.10008.1.2.2	Yes	Yes	None
DICOM Implicit VR Little Endian	1.2.840.10008.1.2	Yes	Yes	None
Only Implicit Transfer Syntax List (IMPL)				
DICOM Implicit VR Little Endian	1.2.840.10008.1.2	Yes	Yes	None

Table 4-4: Supported Transfer Syntaxes (association negotiation)

The Only Implicit Transfer Syntax List (IMPL) is used for some SOP Classes which contain attributes with a length exceeding 65534 bytes, which cannot be encoded properly if Explicit VR is used.
The transfer syntaxes listed in the above table represent the default behavior. Compression can be disabled or forced for every single remote DICOM Node.

4.2.1.2 Association Policies

4.2.1.2.1 General

The DICOM standard application context name for DICOM 3.0 is always proposed:

Application Context Name	1.2.840.10008.3.1.1.1

4.2.1.2.2 Number of Associations

Maximum number of simultaneous Associations (Initiator)	10 (configurable)
Maximum number of simultaneous Associations (Acceptor)	unrestricted

4.2.1.2.3 Asynchronous Nature

DICOM Proxy supports asynchronous communication (multiple outstanding transactions over a single association). However, the operations issued over an single association are executed serially.

Maximum number of outstanding asynchronous transactions	unlimited

4.2.1.2.4 Implementation Identifying Information

The implementation information for this Application Entity is:

Implementation Class UID	1.2.276.0.20.1.1.21.2.0.0
Implementation Version Name	DICOMProxy2.0

4.2.1.3 Association Initiation Policy

DICOM Proxy initiates an association in these cases:

1. Find: The DICOM Proxy's Q/R SCP receives a query request from a Brainlab application. This query request is converted to a C-FIND request appropriate for each configured external Q/R server.

2. Retrieve: The DICOM Proxy receives a retrieve request from a Brainlab application and the requested data cannot be found in the local cache, then the retrieve request is converted to a C-MOVE request for each external Q/R server the request shall be sent to.

4.2.1.3.1 Activity – Find

4.2.1.3.1.1 Description and Sequencing of Activities

A DICOM Query/Retrieve C-FIND request is performed when the Proxy receives a C-FIND request. It also issues a C-FIND request in order to determine the available instances when a C-MOVE request is received by the DICOM Proxy.

4.2.1.3.1.2 Proposed Presentation Contexts

Presentation Context Table			
Abstract Syntax	**Transfer Syntax**	**Role**	**Ext. Neg.**
All SCU SOP Classes listed in Table 4-1 and all FIND SCU SOP Classes as listed in Table 4-3	UNCOMP (as listed in Table 4-4)	SCU	None
		SCU	None
		SCU	None

Table 4-5: Proposed Presentation Contexts for Activity Find.

4.2.1.3.1.3 SOP Specific Conformance

DICOM Proxy provides standard conformance to the DICOM Verification Service Class and to the DICOM Query/Retrieve FIND SOP Classes. No extended negotiation is implemented.

A C-FIND can be executed on all levels. On a lower level, all key attributes of the higher levels are included in the query (i.e. no hierarchical queries are performed). C-FIND's on IMAGE and SERIES level can be disabled via a configuration option.

A C-CANCEL will be sent if the remote node performing the C-FIND/C-MOVE request cancels the operation or if the DICOM Proxy is shut down. If the remote server does not react to a C-CANCEL, the association is aborted. The sending of C-CANCEL's can be disabled via a configuration option.

Attribute Name	Tag	Types of Matching
Patient Level (Patient Root Q/R Information Model) Study Level (Study Root Q/R Information Model)		
Patient's Name	(0010,0010)	S, *, U
Patient ID	(0010,0020)	S, *, U
Patient's Birth Date	(0010,0030)	U
Patient's Sex	(0010,0040)	U
Study Level		
Study Date	(0008,0020)	S, R, U
Accession Number	(0008,0050)	S, *, U
Study Instance UID	(0020,000D)	UNIQUE
Study Time	(0008,0030)	U
Study Description	(0008,1030)	U
Modalities in Study	(0008,0061)	U
SOP Classes in Study	(0008,0062)	U
Number of Study Related Series	(0020,1206)	U
Series Level		
Series Instance UID	(0020,000E)	UNIQUE
Series Number	(0020,0011)	U
Series Description	(0008,103E)	U
Modality	(0008,0060)	U
No. of Series Rel. Instances	(0020,1209)	U
Instance Level		
SOP Instance UID	(0008,0018)	UNIQUE
SOP Class UID	(0008,0016)	U
Instance Number	(0020,0013)	U
Instance Creation Date	(0008,0012)	U

Attribute Name	Tag	Types of Matching
Instance Creation Time	(0008,0013)	U

Table 4-6: Patient Root and Study Root Request Identifier for FIND-SCU

The types of Matching supported by the C-FIND SCU:

- An "S" indicates the identifier attribute uses Single Value Matching.
- An “R” indicates Range Matching.
- A “*” indicates wildcard matching.
- A ‘U’ indicates Universal Matching (i.e. the attributes value is empty and shall only be returned, not used as a filter key).
- “UNIQUE” indicates that this is the Unique Key for that query level, in which case Universal Matching or Single Value Matching is used depending on the query level.

Additional Retrieve AET Support:
The DICOM Proxy can be configured to evaluate the attribute Retrieve AE Title (0008,0054). If this attribute is set in a C-FIND response on patient or study level, C-FIND's on the lower levels will be directed to the server specified by this AET.

4.2.1.3.2 Activity – Retrieve

4.2.1.3.2.1 Description and Sequencing of Activities

If the DICOM Proxy receives a C-MOVE request and the requested data cannot be found in the local cache, a C-MOVE operation is performed. The storage target for receiving the DICOM data (the AET with which the move-request is equipped) is the DICOM Proxy application itself.
In its default configuration, the DICOM Proxy expects to receive all data before receiving a final C-MOVE response. However, the Proxy can be configured to wait for a certain time for incoming C-STORE requests, after the final C-MOVE request has been received.

The DICOM Proxy can be configured to perform retrievals on different levels:

- Study Only: Only whole Studies can be downloaded via a C-MOVE Request on STUDY level
- Series: Individual Series are downloaded via a C-MOVE Request on SERIES level
- Series and Instance: Individual Series and Single Images are downloaded via a C-MOVE request on SERIES or IMAGE level (default configuration).

A C-CANCEL will be sent if the remote node performing the C-MOVE request cancels the operation or if the DICOM Proxy is shut down. If the server does not react to a C-CANCEL, the association is aborted. The sending of C-CANCEL's can be disabled via a configuration option.

4.2.1.3.2.2 Proposed Presentation Contexts

Presentation Context Table			
Abstract Syntax	**Transfer Syntax**	**Role**	**Ext. Neg.**
All SCU SOP Classes listed in Table 4-1 and all SCU MOVE SOP Classes as listed in Table 4-3	UNCOMP (as listed in Table 4-4)	SCU	None
		SCU	None
		SCU	None

Table 4-7: Proposed Presentation Contexts for Activity Move.

4.2.1.3.2.3 SOP Specific Conformance

DICOM Proxy provides standard conformance to the DICOM Verification Service Class and to the DICOM Query/Retrieve MOVE SOP Classes. No extended negotiation is implemented.

Additional Retrieve AET Support:
The DICOM Proxy can be configured to evaluate the attribute Retrieve AE Title (0008,0054). If this attribute is set in a C-FIND response, C-MOVE's will be directed to the server specified by this AET.

4.2.1.4 Association Acceptance Policy

DICOM Proxy accepts an association in this case:

1. Store: The DICOM Proxy receives a C-STORE request from a remote DICOM Node.

4.2.1.4.1 Activity - Store

4.2.1.4.1.1 Associated Real-World Activity

A move request from a Brainlab application is forwarded from the DICOM Proxy to a remote Q/R SCP. The remote system starts to store the instances to the DICOM Proxy Storage SCP. The result is forwarded to the original requestor.

A user wants to push data to the DICOM Proxy for later retrieval. The data shall be stored into the Cache.

4.2.1.4.1.2 Proposed Presentation Contexts

Presentation Context Table			
Abstract Syntax	**Transfer Syntax**	**Role**	**Ext. Neg**
All SCP SOP Classes as listed in Table 4-1 and Table 4-2	All SCP Transfer Syntaxes as listed in Table 4-4	SCU	None
		SCU	None
		SCU	None

Table 4-8: Storage SCP Presentation Contexts.

4.2.1.4.1.3 SOP Specific Conformance

DICOM Proxy provides standard conformance to the DICOM Verification Service Class and to the DICOM Storage SOP Classes. No extended negotiation is implemented.

The received data is either forwarded to the requesting client or stored into the cache. To determine if the data shall be forwarded, the Proxy compares the Patient ID, the Patient Name, the Study UID, and the Series UID from the stored messages with the information found in the original retrieve request. For the comparison of the Patient's Name delimiters are ignored.

The DICOM Proxy can also be configured to ignore the incoming Study and Series UID. In such a case the Study ID, Study Date, Study Time, Study Description, Series Description and Series Number from a previous C-FIND request are used to decide if the incoming data matches the requested data.

4.2.1.4.1.4 Presentation Context Acceptance Criterion

DICOM Proxy accepts multiple presentation contexts containing the same abstract syntax.

4.2.1.4.1.5 Transfer Syntax Selection Policy

The first Transfer Syntax encountered in the configuration file, which matches a Transfer Syntax offered for a given Presentation Context, will be selected as the accepted Transfer Syntax for that Presentation Context.

4.3 Network Interfaces

4.3.1 Physical Network Interface

DICOM Proxy supports the DICOM upper layer using TCP/IP. DICOM Proxy is indifferent to the physical medium over which TCP/IP executes. It inherits this from the operating system upon which it executes.

4.3.2 Additional Protocols

The usage of DNS and DHCP is possible and is based on the network configuration of the operating system upon which DICOM Proxy executes.

4.4 Configuration

4.4.1 AE Title / Presentation Address Mapping

Configuration of remote and local DICOM nodes can be performed with the Brainlab SettingsEditor.

DICOM Proxy can configure several nodes representing remote Q/R Servers or Storage SCPs and their corresponding IP Addresses, Host names and AET's.

4.4.1.1 Local AE Titles

The Local AET and the Move Destination AET for the Query/Retrieve SCU can be configured for each remote Q/R Server.

The AET's of the Storage SCP and the Q/R SCP do not need to be configured, since the DICOM Proxy accepts any called AET. It is recommended to use BRAINLAB_PROXY or PROXY.

Application Entity	Default AE Title	Default TCP/IP Port
DICOM Proxy	BRAINLAB_PROXY	104

4.4.1.2 Remote AE Title/Presentation Address Mapping

You can specify several remote Query/Retrieve SCPs C-MOVE requests can be sent to simultaneously. The AET, IP address/hostname and listening port may be configured for each DICOM node separately with the Brainlab SettingsEditor.

4.4.2 Parameters

Additional a timeout may be specified for each DICOM node separately.

Parameter	Configurable	Default Value
Timeout	Yes	30

Maximum PDU Size	No	64234

5 Media Interchange

DICOM Proxy does not support DICOM media interchange for import and export of DICOM data.

6 Support of Extended Character Sets

DICOM Proxy supports the

- ISO_IR 100 (ISO 8859-1:1987 Latin Alphabet No. 1 supplementary set)

7 Security Profiles

No security profiles are supported.

8 Annexes

8.1 IOD Contents

8.1.1 Created SOP Instances

No SOP Instances are created by the DICOM Proxy, it only stores or forwards instances created by other application entities.

8.1.2 Usage of Attributes from Received IODs

The DICOM Proxy requires each Instance to have a valid Study, Series and Instance UID to be processed.

8.2 Data Dictionary of Private Attributes

None used.

8.3 Coded Terminology and Templates

None supported.

8.4 Grayscale Image Consistency

Not supported.

8.5 Standard Extended/Specialized/Private Sop Classes

None supported.

8.6 Private Transfer Syntaxes

None supported.

9 Indexes

9.1 Index of Tables

Table 1-1: Network services supported by DICOM Proxy..... 5
Table 4-1: Supported Verification SOP Classes..... 13
Table 4-2: Supported Storage SOP Classes..... 15
Table 4-3: Supported Query/Retrieve SOP Classes..... 16
Table 4-4: Supported Transfer Syntaxes (association negotiation) 16
Table 4-5: Proposed Presentation Contexts for Activity Find..... 18
Table 4-6: Patient Root and Study Root Request Identifier for FIND-SCU 19
Table 4-7: Proposed Presentation Contexts for Activity Move..... 19
Table 4-8: Storage SCP Presentation Contexts. 20

9.2 Index of Figures

Figure 4-1: The Query/Retrieve SCU and Storage SCP application flow diagram..... 11
Figure 4-3: Sequencing of Query/Retrieve SCU and Storage SCP 13